NEW ITEMS IN FRISTOM RANGE 2012.

FT-038

LED clearance lamp

3 – functional version
- **Power consumption: 12/ 24V – 0,08W**
- **Rated power: 12V – 1W; 24V – 2W**
- **Work range temperature: -40 to +85˚C**
- **Integrated wire LGY 2x0,75mm²**
- **Wire length – 0,5m**

2 – functional version
- **Power consumption: 12/ 24V – 0,04W**
- **Rated power: 12V – 0,5W; 24V – 1W**
- **Work range temperature: -40 to +85˚C**
- **Integrated wire LGY 2x0,75mm²**
- **Wire length – 0,5m**

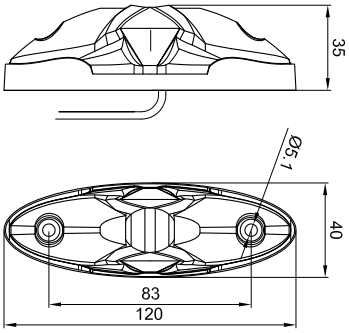

FT-038	3 functional LED clearance lamp with front, side and rear position lights with 0,5m wire	FT-038 CB	2 functional LED clearance lamp with front and rear position lights with 0,5m wire
FT-038 QS075	3 functional LED clearance lamp with front, side and rear position lights with 0,5m wire and QS075 quick connector	FT-038 CB QS075	2 functional LED clearance lamp with front and rear position lights with 0,5m wire and QS075 quick connector
FT-038 QS150	3 functional LED clearance lamp with front, side and rear position lights with 0,5m wire and QS150 quick connector	FT-038 CB QS150	2 functional LED clearance lamp with front and rear position lights with 0,5m wire and QS150 quick connector

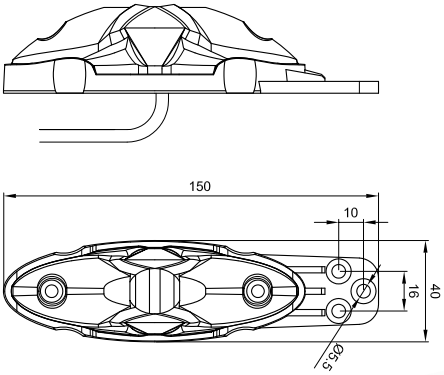

FT-038 I	3 functional LED clearance lamp with front, side and rear position lights with 0,5m wire and a straight rubber holding bracket	FT-038 CB I	2 functional LED clearance lamp with front and rear position lights with 0,5m wire and a straight rubber holding bracket
FT-038 I QS075	3 functional LED clearance lamp with front, side and rear position lights with 0,5m wire, QS075 quick connector and a straight rubber holding bracket	FT-038 CB I QS075	2 functional LED clearance lamp with front and rear position lights with 0,5m wire, QS075 quick connector and a straight rubber holding bracket
FT-038 I QS150	3 functional LED clearance lamp with front, side and rear position lights with 0,5m wire, QS150 quick connector and a straight rubber holding bracket	FT-038 CB I QS150	2 functional LED clearance lamp with front and rear position lights with 0,5m wire, QS150 quick connector and a straight rubber holding bracket

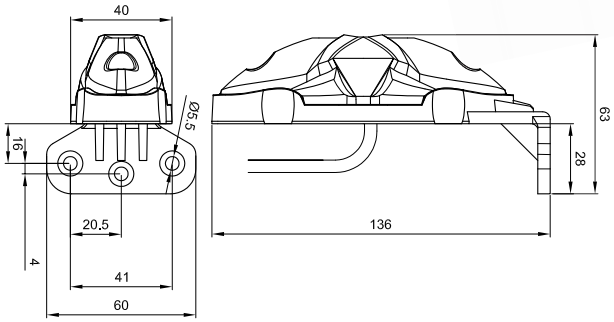

FT-038 II	3 functional LED clearance lamp with front, side and rear position lights with 0,5m wire and an angular rubber holding bracket	FT-038 CB II	2 functional LED clearance lamp with front and rear position lights with 0,5m wire and an angular rubber holding bracket
FT-038 II QS075	3 functional LED clearance lamp with front, side and rear position lights with 0,5m wire, QS075 quick connector and an angular rubber holding bracket	FT-038 CB II QS075	2 functional LED clearance lamp with front and rear position lights with 0,5m wire, QS075 quick connector and an angular rubber holding bracket
FT-038 II QS150	3 functional LED clearance lamp with front, side and rear position lights with 0,5m wire, QS150 quick connector and an angular rubber holding bracket	FT-038 CB II QS150	2 functional LED clearance lamp with front and rear position lights with 0,5m wire, QS150 quick connector and an angular rubber holding bracket

Fristom
www.fristom.com.pl

FRISTOM
TOMASZ FRIESKE

POLAND
86-416 BYDGOSZCZ
BYSZEWSKA 54A STR.
VAT ID: 554-101-87-41

SALES DEPARTMENT:
MOB. +48 609 909 456
TEL. +48 52 360 90 50
FAX +48 52 327 75 41
rc@fristom.com.pl

NEW ITEMS IN FRISTOM RANGE 2012.

FT-040

LED fog lamp

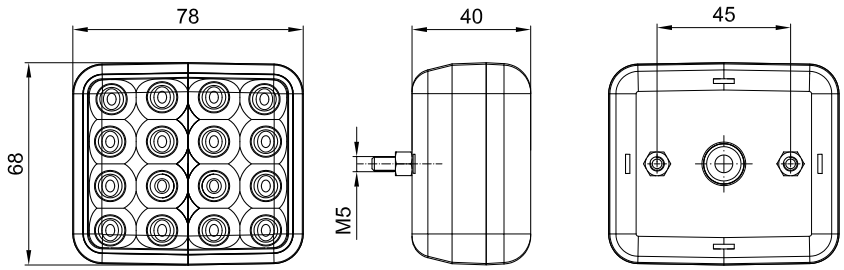

FT-040	LED fog lamp with 0,5m wire LGY 2x0,75 mm^2
FT-040 QS075	LED fog lamp with 0,5m wire LGY 2x0,75 mm^2 and QS075 quick connector

- Voltage supply: universal 12-36V
- Polarization: unrestricted, any possible
- Power consumption: 12V – 0,13A; 24V – 0,075A
- Rated power: 12V – 1,6W; 24V – 1,8W
- Work range temperature: -40 to +85˚C
- Integrated wire LGY 2x0,75mm^2
- Wire length – 0,5m

FT-041

LED reversing lamp

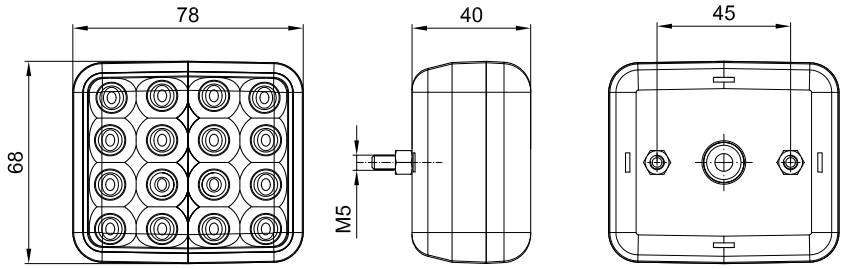

- Voltage supply: universal 12-36V
- Polarization: unrestricted, any possible
- Power consumption: 12V – 0,13A; 24V – 0,075A
- Rated power: 12V – 1,6W; 24V – 1,8W
- Work range temperature: -40 to +85˚C
- Integrated wire LGY 2x0,75mm^2
- Wire length – 0,5m

FT-041	LED reversing lamp with 0,5m wire LGY 2x0,75 mm^2
FT-041 QS075	LED reversing lamp with 0,5m wire LGY 2x0,75 mm^2 and QS075 quick connector

Fristom
www.fristom.com.pl

FRISTOM
TOMASZ FRIESKE

POLAND
86-416 BYDGOSZCZ
BYSZEWSKA 54A STR.
VAT ID: 554-101-87-41

SALES DEPARTMENT:
MOB. +48 609 909 456
TEL. +48 52 360 90 50
FAX +48 52 327 75 41
rc@fristom.com.pl